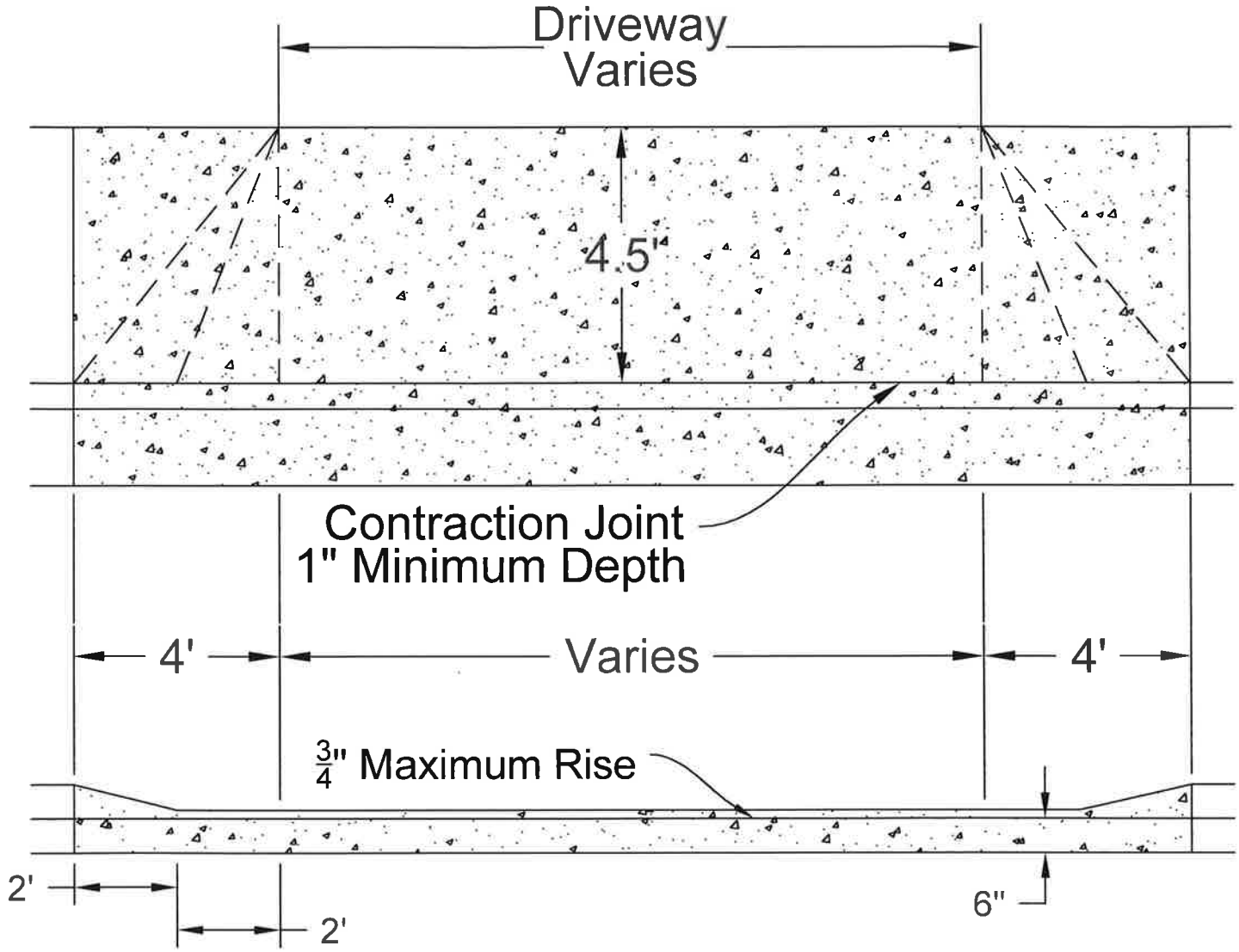

Note: 4" Washed Sand or Crushed Concrete Base needed under concrete.

Scale	Sheet #
NTS	1 of 1
Date	
09/01/2015	
File Name	
Construction Details.dwg	

DISCLAIMER

The specifications represented in this document are in accordance with established City of Mandan Engineering & Planning practices and are an electronic facsimile of the specifications on file in the City of Mandan Engineering & Planning Department. However, neither the City of Mandan nor its employees can or do warranty these specifications to be complete specifications for any or all construction projects. The specification document, together with all addendums listed in each construction project specification, shall be the project specification for the City of Mandan. The user acknowledges and accepts all the data "as is", including the fact that the details are under a constant state of maintenance, correction and revision.

1304
SIDEWALK & DRIVEWAY DETAIL

Engineering & Planning Department

CITY OF MANDAN
"WHERE THE WEST BEGINS"

1) Expansion joint spacing shall be at 50' intervals, and when abutting existing concrete.

2) Concrete for driveways and sidewalks shall meet compressive strength requirements of 3500 P.S.I..

3) Concrete for driveways and sidewalks through driveways shall be 6" thick, all other sidewalks shall be 4" thick.

4) Driveway apron widths:

Residential;

36' Maximum or 10'minimum
Driveway aprons to have flares to match curb elevation. Standard flares will require 4' of additional curb removed.
All driveways measured at curb.

Commercial;

40' Maximum
Driveway aprons to have flares to match curb elevation. Standard flares will require 4' of additional curb removed.
All driveways measured at curb.
If no sidewalk, driveway measured 8.5' from back of curb.

5) Where necessary to remove existing curb and gutter it shall be removed to an existing joint or saw cut to a minimum ⅓ thickness of existing concrete.

6) Contraction joint spacing shall be at 5' intervals and be at a minimum 1/4 depth of pour.

7) When constructing new driveway aprons or altering existing driveway aprons, the existing curb and gutter shall be removed, replaced and made part of the new construction.

8) Curb and gutter may remain in place during driveway apron construction if it is an existing depressed curb and gutter section.

9) Sidewalk to slope 1" towards the street. And $\frac{1}{4}$" per foot from the front side of the sidewalk to backside of curb

10) All concrete to have 4" of sand or crushed concrete base.

Scale	Sheet #
NTS	1 of 1
Date	
09/01/2015	
File Name	
Construction Details.dwg	

DISCLAIMER

The specifications represented in this document are in accordance with established City of Mandan Engineering & Planning practices and are an electronic facsimile of the specifications on file in the City of Mandan Engineering & Planning Department. However, neither the City of Mandan nor its employees can or do warranty these specifications to be complete specifications for any or all construction projects. The specification document, together with all addendums listed in each construction project specification, shall be the project specification for the City of Mandan. The user acknowledges and accepts all the data "as is", including the fact that the details are under a constant state of maintenance, correction and revision.

1304
SIDEWALK & DRIVEWAY DETAIL

Engineering & Planning Department

CITY OF MANDAN
"WHERE THE WEST BEGINS"

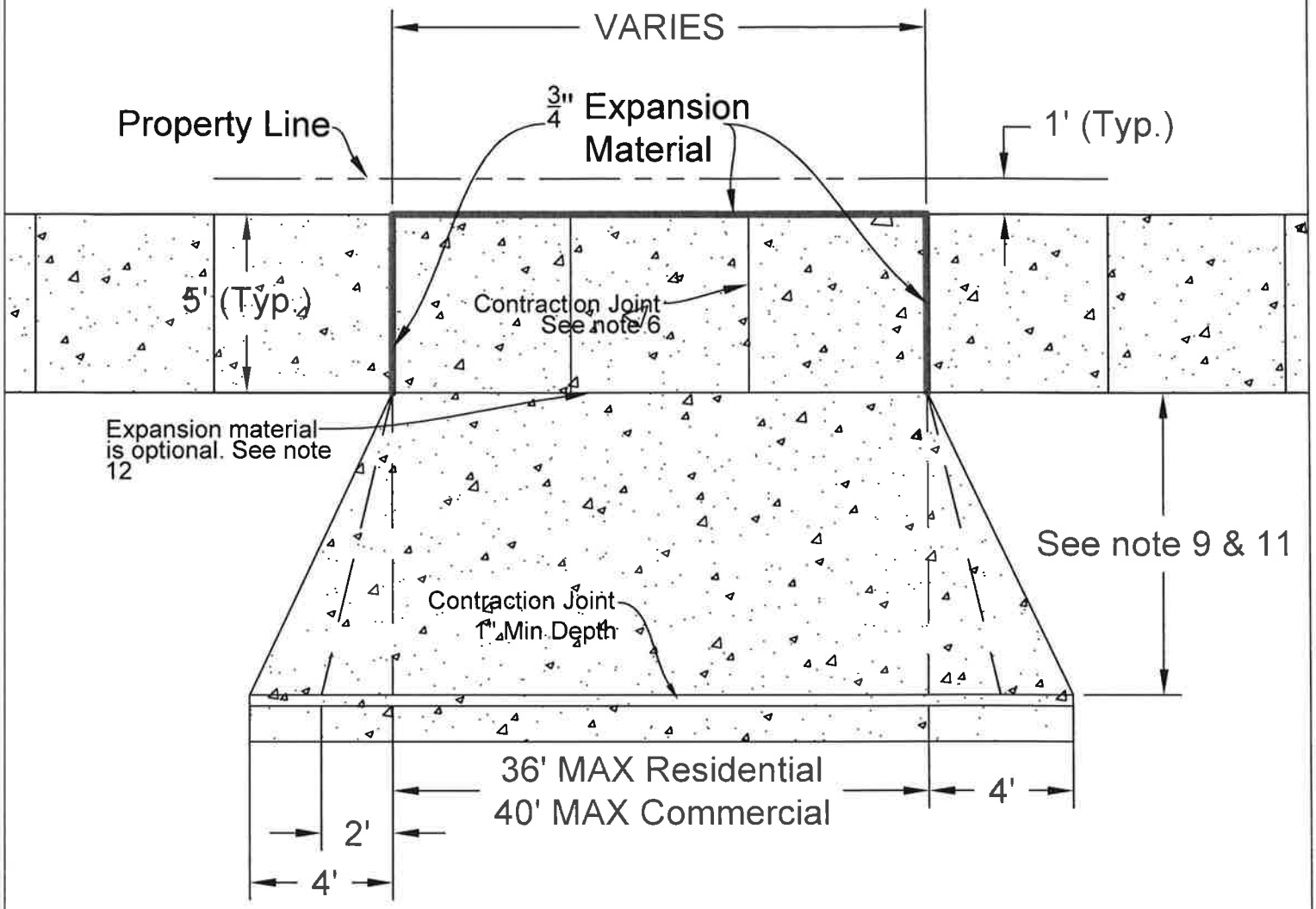

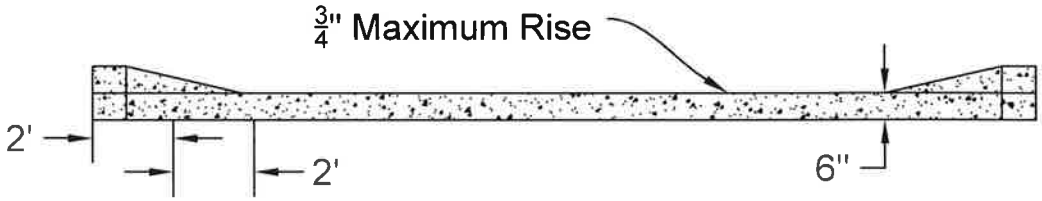

Note: 4" Washed Sand or Crushed Concrete Base needed under Concrete.

Scale	Sheet #
NTS	1 of 1
Date	
09/01/2015	
File Name	
Construction Details.dwg	

DISCLAIMER

The specifications represented in this document are in accordance with established City of Mandan Engineering & Planning practices and are an electronic facsimile of the specifications on file in the City of Mandan Engineering & Planning Department. However, neither the City of Mandan nor its employees can or do warranty these specifications to be complete specifications for any or all construction projects. The specification document, together with all addendums listed in each construction project specification, shall be the project specification for the City of Mandan. The user acknowledges and accepts all the data "as is", including the fact that the details are under a constant state of maintenance, correction and revision.

1304-A
SIDEWALK & DRIVEWAY DETAIL

Engineering & Planning Department

CITY OF MANDAN
WHERE THE WEST BEGINS

1) Expansion joint spacing shall be at 50' intervals, and when abutting existing concrete.

2) Concrete for driveways and sidewalks shall meet compressive strength requirements of 3500 P.S.I.

3) Concrete for driveways and sidewalks through driveways shall be 6" thick, all other sidewalks shall be 4" thick.

4) Driveway apron widths:

Residential: 36' maximum or 10' minimum

Driveway aprons to have flares to match curb elevations. Standard flares will require 4' of additional curb cut.
All driveway aprons are measured at the curb

Commercial: 40' maximum

Driveway aprons to have flares to match curb elevation. Standard flares will require 4' of additional curb cut.
All driveway aprons are measured at the curb
If no sidewalk, driveway apron flare measured 8.5' from back of curb

5) Where necessary to remove existing curb and gutter it shall be removed to an existing joint or saw cut to a minimum $\frac{1}{3}$ thickness of existing concrete.

6) Contraction joint spacing shall be at 5' intervals and be at a minimum $\frac{1}{4}$ depth of pour

7) When constructing a new driveway apron or altering an existing apron, the existing curb and gutter shall be removed, replaced and made part of the new construction

8) Curb and gutter may remain in place during driveway apron construction it it is an existing depressed curb and gutter section

9) Sidewalk to slope 1" towards the street. And $\frac{1}{4}$" per foot from the front side of the sidewalk to backside of curb

10) All sidewalk and/or driveway aprons to have 4" of sand or crushed concrete base

11) On all aprons over 36', contractors may fill in the flare with concrete to make it a straight flare. This will enable an additional 4' on each side of the apron. Where the straight flare meets the existing sidewalk, the sidewalk must be 6" thick

12) The expansion material between the 6" sidewalk and the driveway apron is now optional. If the contractor pours the sidewalk and apron on separate days then form work with expansion and/or a keyway will be required. Without the expansion material there is a required saw cut of $\frac{1}{4}$ the depth of pour

Scale	Sheet #
NTS	1 of 1
Date	
09/01/2015	
File Name	
Construction Details.dwg	

DISCLAIMER

The specifications represented in this document are in accordance with established City of Mandan Engineering & Planning practices and are an electronic facsimile of the specifications on file in the City of Mandan Engineering & Planning Department. However, neither the City of Mandan nor its employees can or do warranty these specifications to be complete specifications for any or all construction projects. The specification document, together with all addendums listed in each construction project specification, shall be the project specification for the City of Mandan. The user acknowledges and accepts all the data "as is", including the fact that the details are under a constant state of maintenance, correction and revision.

1304-A
SIDEWALK &
DRIVEWAY DETAIL

Engineering & Planning Department

CITY OF MANDAN
"Where The West Begins"

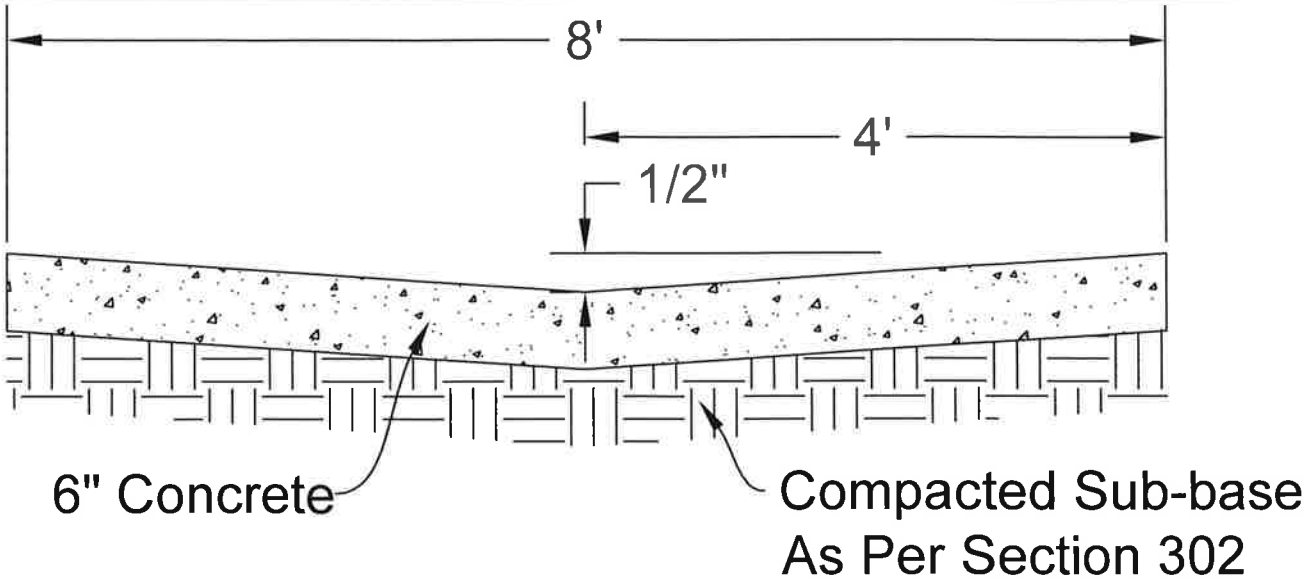

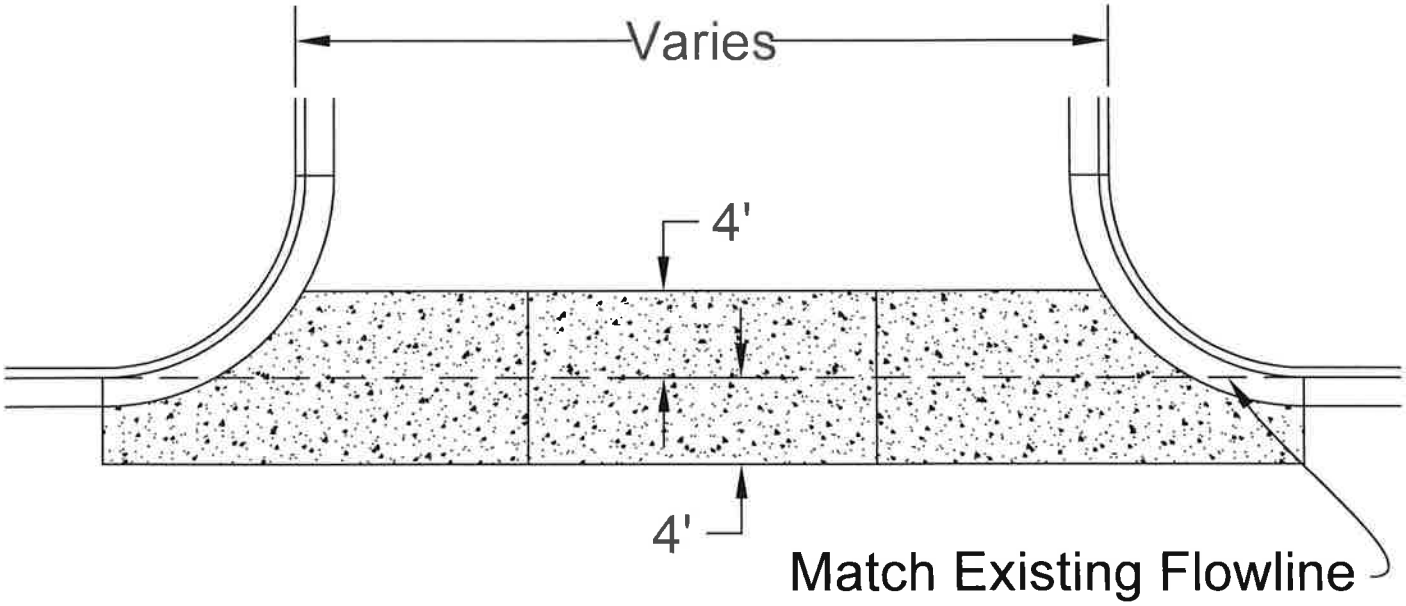

Note: Remove adequate asphalt to insure smooth transition.

Scale	Sheet #
NTS	1 of 1
Date	
04/07/2015	
File Name	
Construction Details.dwg	

DISCLAIMER

The specifications represented in this document are in accordance with established City of Mandan Engineering & Planning practices and are an electronic facsimile of the specifications on file in the City of Mandan Engineering & Planning Department. However, neither the City of Mandan nor its employees can or do warranty these specifications to be complete specifications for any or all construction projects. The specification document, together with all addendums listed in each construction project specification, shall be the project specification for the City of Mandan. The user acknowledges and accepts all the data "as is", including the fact that the details are under a constant state of maintenance, correction and revision.

1303-B
TYPICAL VALLEY GUTTER DETAIL

Engineering & Planning Department

CITY OF MANDAN
"Where The West Begins"

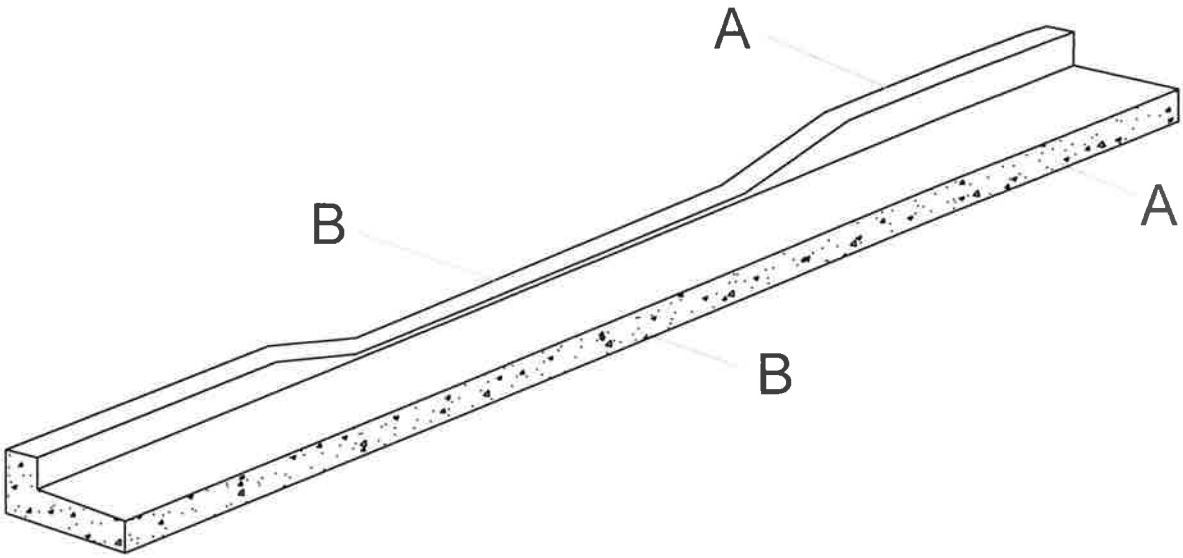

Section B - B

Depressed Curb

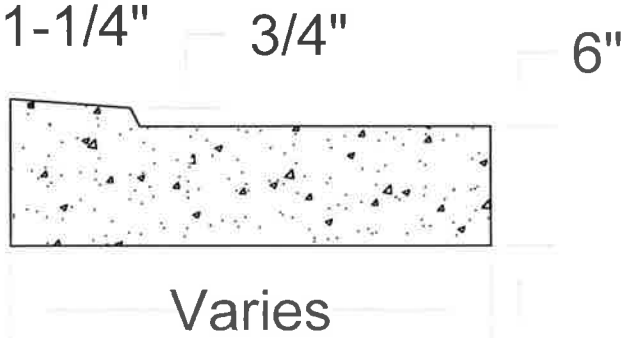

Section A - A

Full Curb

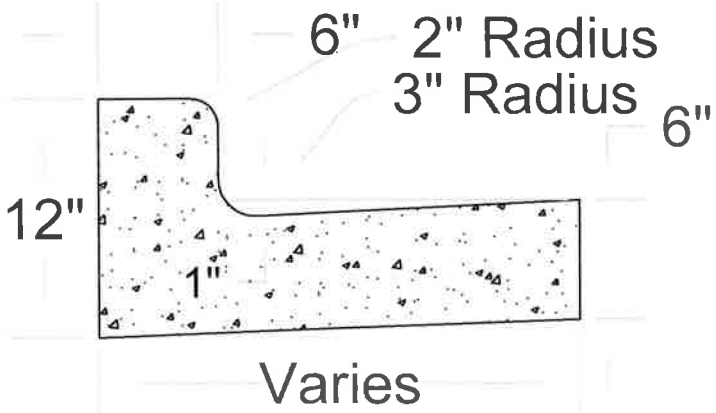

Scale	Sheet #
NTS	1 of 1
Date	
04/07/2015	
File Name	
Construction Details.dwg	

DISCLAIMER

The specifications represented in this document are in accordance with established City of Mandan Engineering & Planning practices and are an electronic facsimile of the specifications on file in the City of Mandan Engineering & Planning Department. However, neither the City of Mandan nor its employees can or do warranty these specifications to be complete specifications for any or all construction projects. The specification document, together with all addendums listed in each construction project specification, shall be the project specification for the City of Mandan. The user acknowledges and accepts all the data "as is", including the fact that the details are under a constant state of maintenance, correction and revision.

1304-B
TYPICAL CURB & GUTTER DETAIL

Engineering & Planning Department

CITY OF MANDAN
"WHERE THE WEST BEGINS"

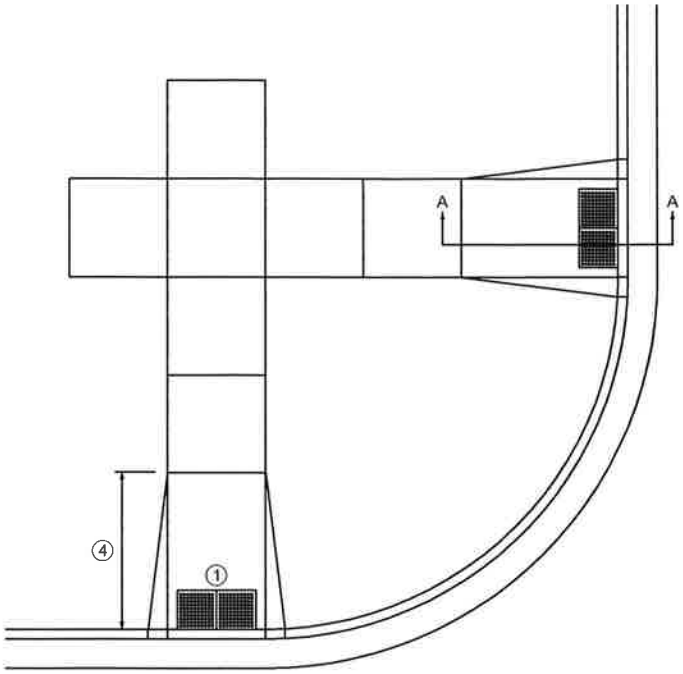

NOTE NO. ① 2'X2' DETECTABLE WARNING PANEL

NOTE NO. ② BOTTOM OF LANDING SHALL BE 6" THICK TAPERED TO 4" THICK MIN. 4' UP THE LANDING

NOTE NO. ③ THIS SLOPE MARY VARY DUE TO CURB HEIGHT

NOTE NO. ④ LENGTH OF RAMP SHALL BE DETERMINED BY THE ENGINEER

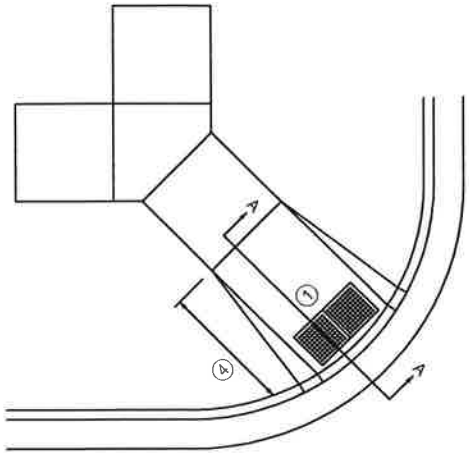

FLARED SIDES OF CURB RAMP

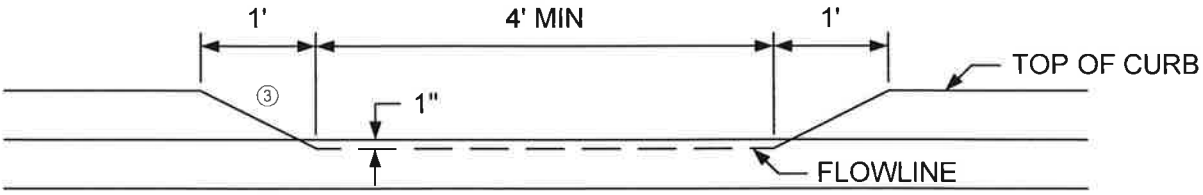

SECTION A-A

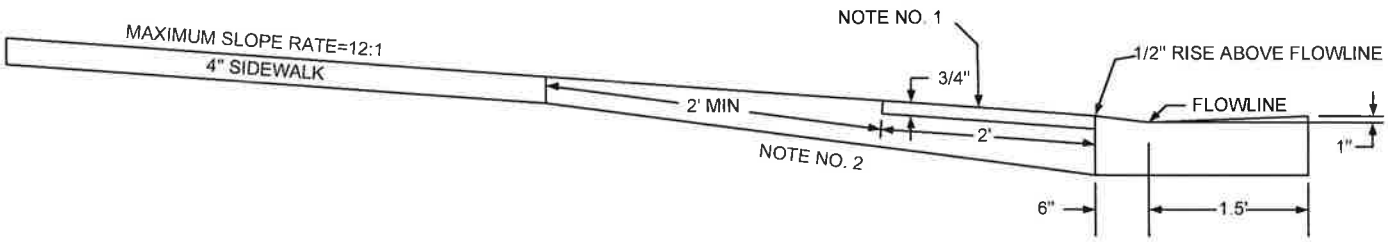

Scale	Sheet #
NTS	1 of 1
Date	
04/07/2015	
File Name	
Construction Details.dwg	

DISCLAIMER

The specifications represented in this document are in accordance with established City of Mandan Engineering & Planning practices and are an electronic facsimile of the specifications on file in the City of Mandan Engineering & Planning Department. However, neither the City of Mandan nor its employees can or do warranty these specifications to be complete specifications for any or all construction projects. The specification document, together with all addendums listed in each construction project specification, shall be the project specification for the City of Mandan. The user acknowledges and accepts all the data "as is", including the fact that the details are under a constant state of maintenance, correction and revision.

1304 C-1 HANDICAP RAMP DETAIL

Engineering & Planning Department

CITY OF MANDAN

WHERE THE WEST BEGINS

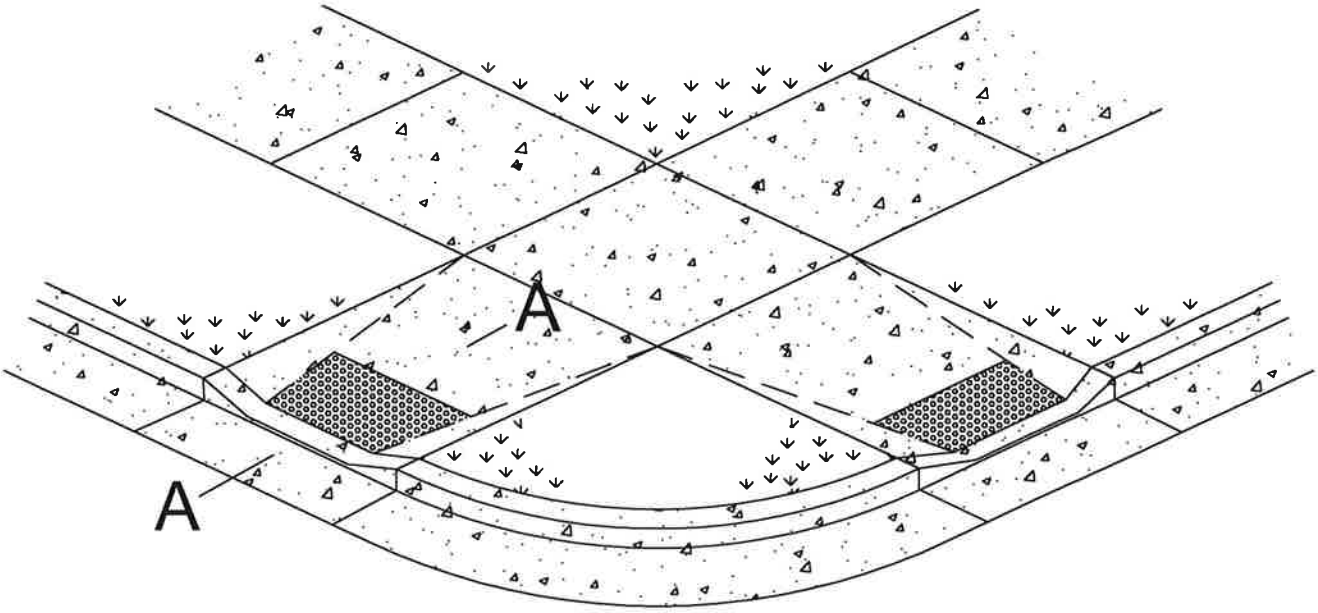

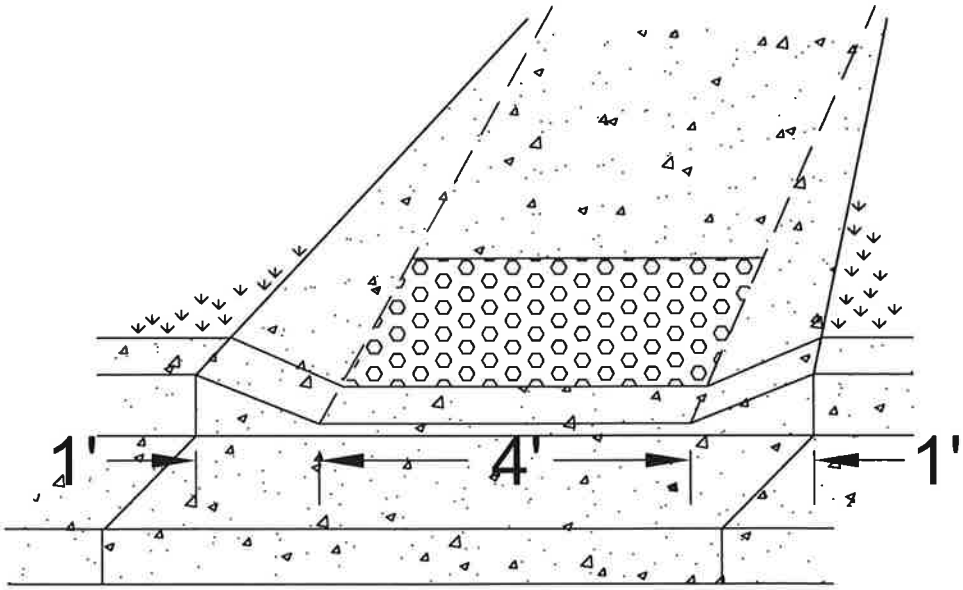

Scale	Sheet #
NTS	1 of 1
Date	
04/07/2015	
File Name	
Construction Details.dwg	

DISCLAIMER

The specifications represented in this document are in accordance with established City of Mandan Engineering & Planning practices and are an electronic facsimile of the specifications on file in the City of Mandan Engineering & Planning Department. However, neither the City of Mandan nor its employees can or do warranty these specifications to be complete specifications for any or all construction projects. The specification document, together with all addendums listed in each construction project specification, shall be the project specification for the City of Mandan. The user acknowledges and accepts all the data "as is", including the fact that the details are under a constant state of maintenance, correction and revision.

1304-C
HANDICAP RAMP DETAIL

Engineering & Planning Department

CITY OF MANDAN

"Where The West Begins"

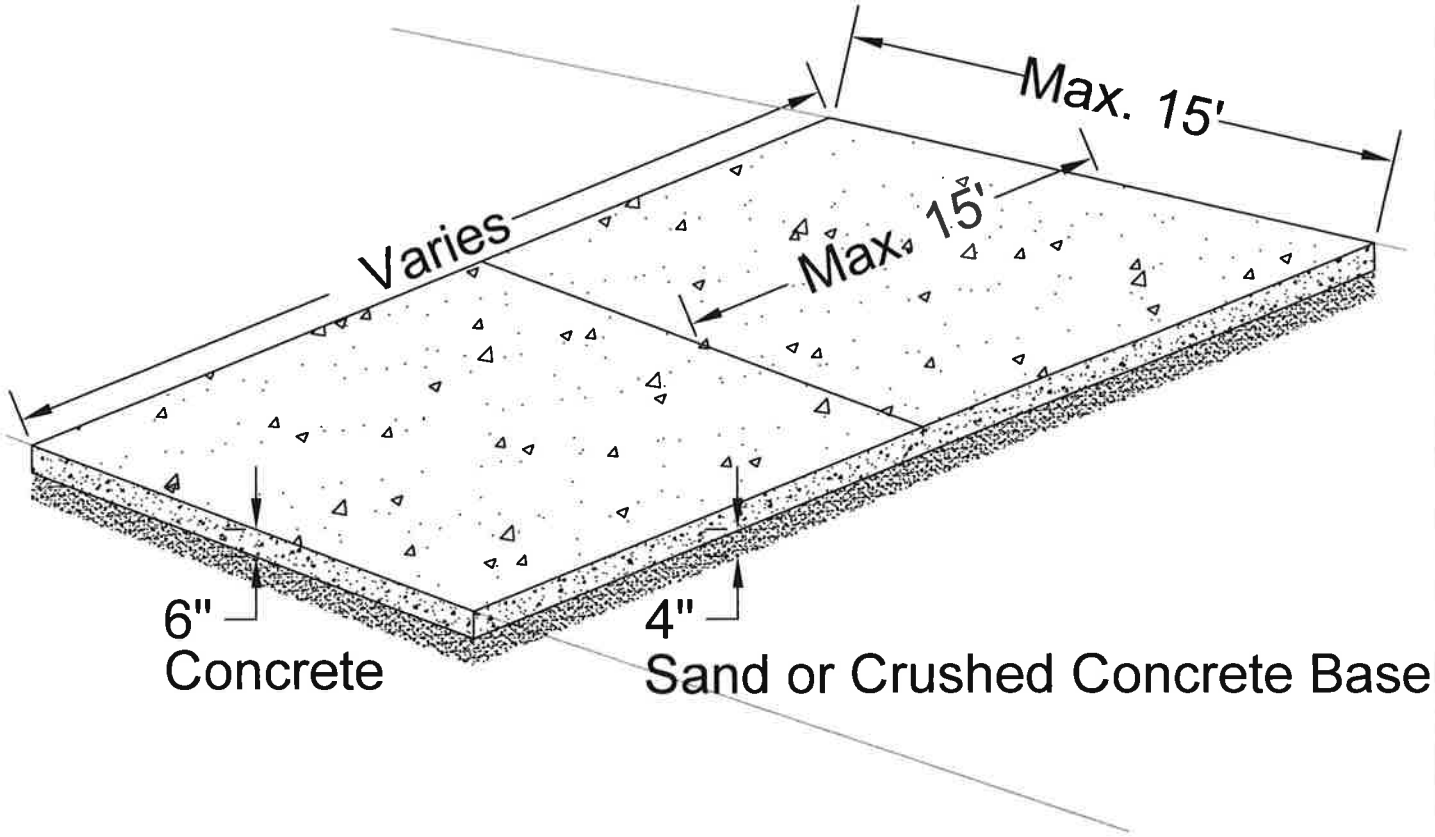

Construction Notes

1) Recommended concrete strength is to be 3500 psi.
2) Fiber mesh is also recommended for added strength.
3) Contraction joints are recommended to be placed no further than 15 feet apart and 1 inch in depth.
4) Expansion material is required to be placed along all existing concrete at 50 foot intervals in length.

Scale	Sheet #
NTS	1 of 1
Date	
04/07/2015	
File Name	
Construction Details.dwg	

DISCLAIMER

The specifications represented in this document are in accordance with established City of Mandan Engineering & Planning practices and are an electronic facsimile of the specifications on file in the City of Mandan Engineering & Planning Department. However, neither the City of Mandan nor its employees can or do warranty these specifications to be complete specifications for any or all construction projects. The specification document, together with all addendums listed in each construction project specification, shall be the project specification for the City of Mandan. The user acknowledges and accepts all the data "as is", including the fact that the details are under a constant state of maintenance, correction and revision.

1304-D
TYPICAL DRIVEWAY SLAB DETAIL

Engineering & Planning Department

CITY OF MANDAN
WHERE THE WEST BEGINS

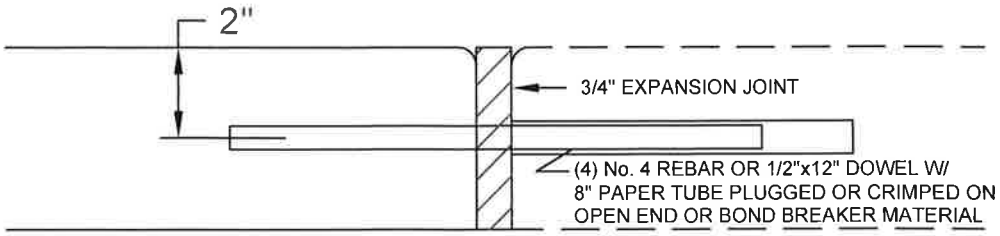

END OF SIDEWALK RUN OR AT EXPANSION JOINT, APPROXIMATELY 100' INTERVALS

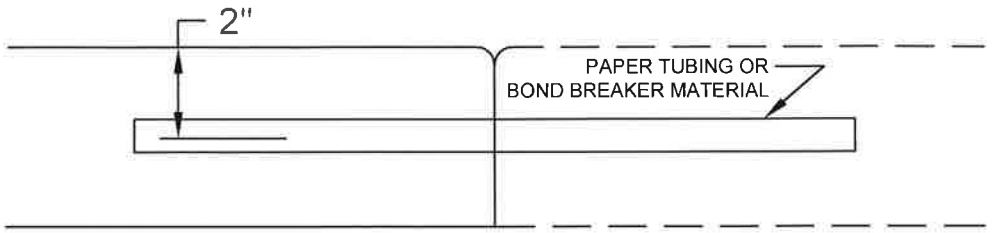

TEMP. END OF WORK NOT ENDING AT AN EXPANSION JOINT

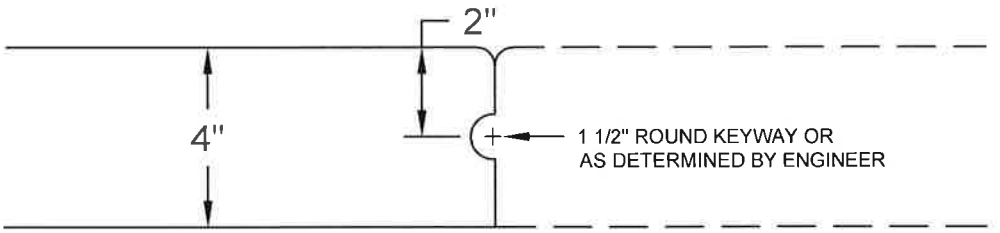

TEMP. END OF WORK NOT ENDING AT AN EXPANSION JOINT

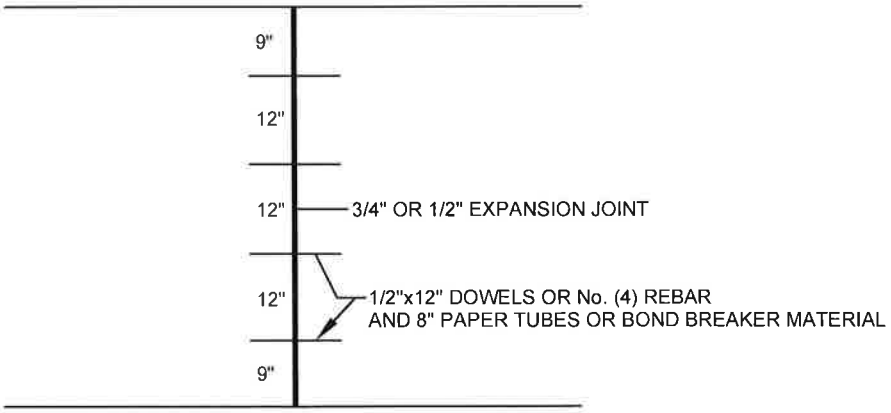

TYPICAL 4.5' WIDE SIDEWALK AT LOT LINES, CROSSWALKS OR 100' INTERVALS

STANDARD CONCRETE SIDEWALK

Scale	Sheet #
NTS	1 of 1
Date	
04/07/2015	
File Name	
Construction Details.dwg	

DISCLAIMER

The specifications represented in this document are in accordance with established City of Mandan Engineering & Planning practices and are an electronic facsimile of the specifications on file in the City of Mandan Engineering & Planning Department. However, neither the City of Mandan nor its employees can or do warranty these specifications to be complete specifications for any or all construction projects. The specification document, together with all addendums listed in each construction project specification, shall be the project specification for the City of Mandan. The user acknowledges and accepts all the data "as is", including the fact that the details are under a constant state of maintenance, correction and revision.

1304-A1
STANDARD CONCRETE SIDEWALK

Engineering & Planning Department

CITY OF MANDAN
"WHERE THE WEST BEGINS"