CITY OF
MANDAN

AGENDA
MANDAN PLANNING & ZONING COMMISSION
COMMISSION ROOM 5:15 P.M.
SEPTEMBER 28, 2015

Roll Call, Reading and Approval of the August 24, 2015 minutes.

NEW BUSINESS

1. **A request from Blaine Engelstad for a variance to allow relocating an existing garage on The property is Lot 1, Block 1, North Prairie 5th Addition in Section 8, Township 139N, Range 81W at 5305 Highland Road N.**

2. **A request from Verity Homes for final plat approval and a change of zoning. The request is to change the zoning of Lots 9-16, Block 1, Heart Ridge Addition Replat in Section 34, Township 139N, Range 81W, from RM (Multi-Family Residential) to PUD (Planned Unit Development). The property is located on 14th Street SE west of 8th Avenue SE.**

OTHER BUSINESS

1. **Public hearing to consider adopting amendments to Subpart B Land Development and Public Services of the recently adopted new city code.**

MANDAN PLANNING AND ZONING COMMISSION
MANDAN CITY HALL BUILDING
August 24, 2015

The Planning and Zoning Commission of Mandan duly met in session in the meeting room of the Mandan City Hall Building on August 24, 2015, at 5:15 p.m. CDT.

Commissioners Present: Zachmeier, Fleischer, Kelly, Klein, Knoll, Van Beek, Leingang, Laber, Robinson

Commissioners Absent: Mehlhoff, Liepitz, Beach

Commissioner Laber motions to approve the July 27, 2015 minutes. Mayor Van Beek seconds. Upon vote, the motion receives unanimous approval of the Board.

NEW BUSINESS

1. A request from Enclave Equities LLC, with authorization from Mitzel Builders, Inc. for final plat approval and zone change of Lakewood 9th Addition. The request is to change the zoning from A (Agricultural) to R7 (Single-Family Residential), R3.2 (Two-Family Residential), RM (Multi-Family Residential) and CB (Heavy Commercial) under a PUD (Planned Unit Development). Said addition is a portion of the NE ¼ of Section 1, Township 138N, Range 81W. The property is located west of 40th Avenue SE and south of 19th Street SE.

Bob Decker, City Planner, describes and identifies the area. This is the last phase of Lakewood. Mitzel is selling this to Goldammer and the plat and zone change is part of the agreement to have the property transferred. An assisted living nursing facility is planned and has to be in operation by January 2017. A temporary access will be granted over the winter to get building equipment in there. The remainder residential and commercial development will follow later. Hopefully, the water and sewer will be put in this fall. The paving will be done as an assessment district next year. To be able to modify some of the standards of this development, Bob recommends a PUD. This would allow some smaller lots available for residential design.

Commissioner Laber wants to make sure staff does the recording of the plat. Bob says that can be done. Bob says staff is working with the county on how the city can get plat copies in a timely matter after recording.

Commissioner Laber motions to approve the final plat and zone change on the condition the plat is recorded by staff. Commissioner Leingang Seconds. Upon vote, the motion passes unanimously.

2. A request from RBROS Developers, LLC, for final plat approval of Mandan Industrial Park 10th Addition. Said addition is all of Lot 1, Block 2, and the north 30' of

vacated 42nd Street NW of Mandan Industrial Park 7th Addition of the N1/2 of Section 17, Township 139N, Range 81W. The property is located at 4304 32nd Avenue NW.

Bob Decker, City Planner, describes and identifies the area. Novaspect needs more room so they are expanding. The building will be on the northwest corner of this parcel. The owner decided to split it into 6 lots for potential sale. The utility easement that runs down the middle will be reduced in width. They are still working on the access. City staff has advised not to allow access off Old Red Trail.

Commissioner Leingang motions to approve the final plat. Commissioner Kelly Seconds. Upon vote, the motion passes unanimously.

OTHER BUSINESS

1.Discussion of proposed ordinance changes.

- **a. Definitions**
- **b. Time Limit**
- **c. Supplementary provisions**
- **d. Accessory buildings**
- **e. Incidental uses**
- **f. Group uses**
- **g. Special uses**

Bob asks the commission if anybody has any questions, comments or concerns regarding the proposed changes. He would like to bring this back to the next meeting as a public hearing to formally adopt the changes. He will include any edits commissioners want to make, in the final draft.

Commissioner Laber reminds the other commissioners to make sure their microphones are on since the meeting in now televised.

2.Election of officers.

Commissioner Leingang motions to elect no change in Chair, Vice Chair and Secretary for another year. Chair Robinson will remain chair, Vice Chair Liepitz will remain vice chair and Nancy Moser will remain secretary. Commissioner Knoll seconds. Upon vote, the motion passes unanimously.

Mayor Van Beek motions to adjourn. Commissioner Laber seconds. Motion passes unanimously. Meeting adjourns at 5:37 p.m.

NEW BUSINESS ITEM # 1

NEW BUSINESS ITEM # 1

Mandan Planning and Zoning Commission Agenda Item
For Meeting on September 28, 2015
Mandan Engineering and Planning Office Report

Patience Subdivision

Requested Action

Variance

Application Details				
Applicant	Owner	Subdivision	Legal Description	
Blaine Engelstad	Blaine Engelstad	North Prairie 5th	Lot 1, Block 1	
Location	Proposed Land Use	Parcel Size	Number of Lots	
Highland Rd.	Single-family	4.09 acres	1	
Existing Land Use	Adjacent Land Uses	Current Zoning	Proposed Zoning	Adjacent Zoning
Single-family	residential & agriculture	R7	R7	R7
Fees	Date Paid	Adjacent Property Notification Sent	Legal Notices Published	
$200	9/1/2015	None required	None required	

Project Description

Request

The request is to allow relocation of the existing detached garage to a location in front of the primary structure so that a new attached garage can be built onto the primary structure.

Reason for Request

21-03-05 subsection 5 requires that all accessory buildings be located in the rear yard.

Procedure

21-06-02 subsection 2 provides a procedure for granting a variance.

Variances. On appeal from an order, requirement, decision or determination made by an administrative official, the board of adjustment may vary or adjust the strict application of any of the requirements of this title in the case of an exceptionally irregular, narrow, shallow or steep lot or other exceptional physical or topographical condition, by reason of which the strict application of the provisions of the title would result in unnecessary hardship that would deprive the owner of a reasonable use of the land or building involved, but in no other case. No adjustment in the strict application of any provisions of this title shall be granted by the board of adjustment unless it finds:

a. *That there are special circumstances or conditions, fully described in the findings of the board, applying to the land or buildings for which the variance is sought, which circumstances or conditions are peculiar to such land or building, and do not apply generally to land or buildings in the neighborhood, and have not resulted from any act of the applicant taken subsequent to the adoption of this title, whether in violation of the provisions of the title, or not;*
b. *That, for reasons fully set forth in the findings of the board, the circumstances or conditions so found are such that the strict application of the provisions of this title would deprive the applicant of the reasonable use of said land or building, and the granting of the variance is necessary for the reasonable use of the land or building, and that the variance as granted by the board is the minimum variance that will accomplish the relief sought by the applicant;*
c. *That the grant of the variance will be in harmony with the general purposes and intent of this title,*

and not be injurious to the neighborhood or otherwise detrimental to the public welfare.

Justification for granting variance

a. The primary structure was placed well back from the road in the center of an over 4 acre parcel.
b. Neighboring lots have structures closer to the road than the proposed garage would be.
c. There is a new rerouted power line in the area to the side of the primary structure where this garage would normally be located.
d. The area to the side of the primary structure is a low, wet area.

Agency & Other Department Comments

Engineering & Planning Staff Comments

Engineering & Planning Recommendation

Staff recommends approval of this variance request

Proposed Motion

Move to recommend that the city commission approve a variance to allow placement of an accessory building garage in front of the primary structure on Lot 1, Block 1, Patience Subdivision

September 1, 2015

Planning and Zoning request.

I am seeking to place my present detached garage near South shelter belt, East of the 7.2 KV electric line.

I would then replace this building with a new structure, attached to the present home.

I have contacted a cement crew, and a mover.

The cement work would need to be done before freeze-up, and the building would be moved in April/May. New building construction would be done after that. Pump house would be demolished, & water meter moved.

I request a variance, as placement of this building should be year-round. To place it within the detached garage guidelines, (behind the front face of home) would place it on top of 7.2 KV primary line, or near the lowest/wettest part of backyard. 21-09-16

The neighbor to my South, Darrel Jacobsen, was granted a variance, due to the same condition.

Please consider my request.

Blaine J. Engelsten

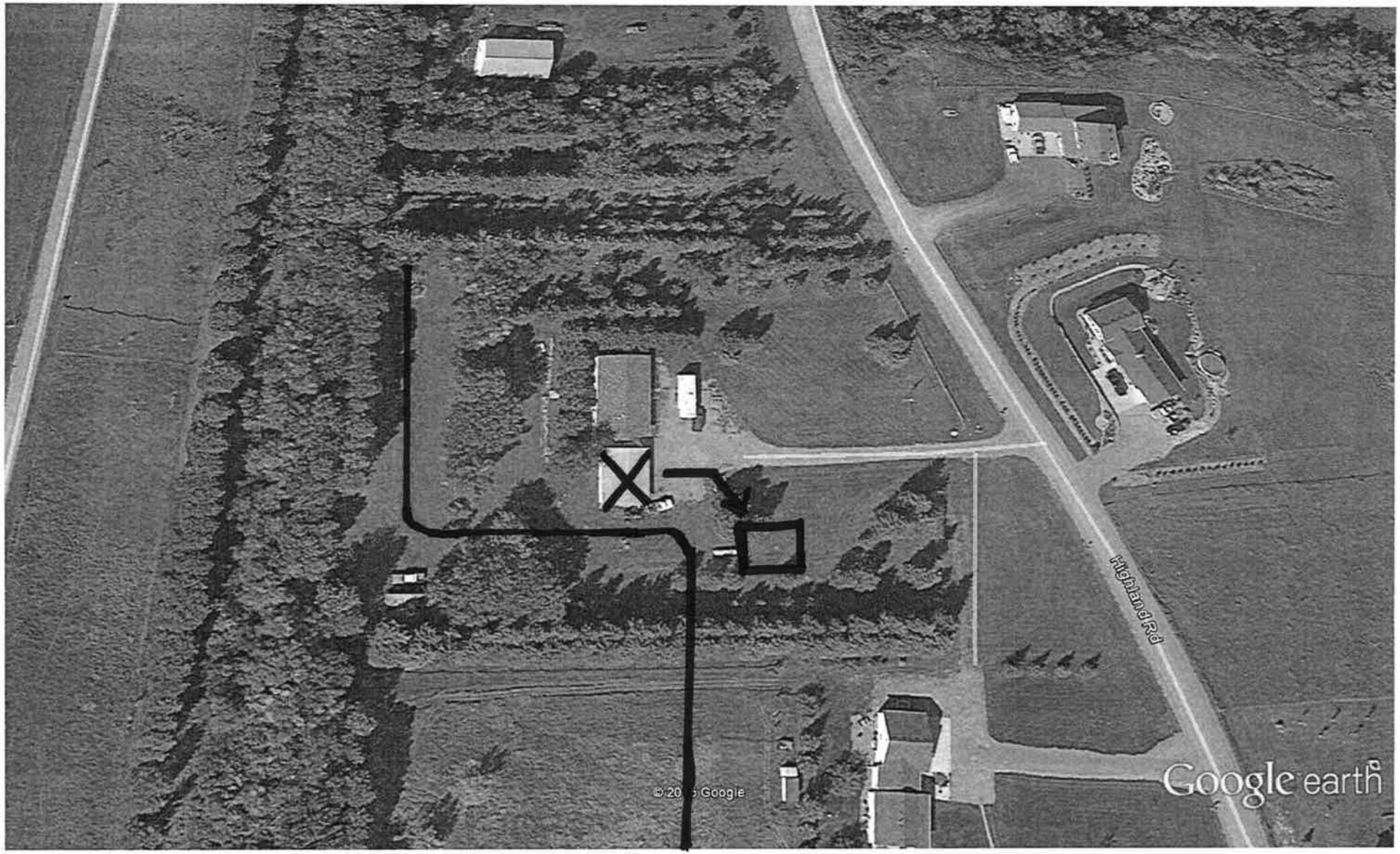

Google earth

feet 500

meters 100

NEW BUSINESS ITEM # 2

NEW BUSINESS ITEM # 2

Mandan Planning and Zoning Commission Agenda Item
For Meeting on September 28, 2015
Mandan Engineering and Planning Office Report

Heart Ridge Cove Addition

Requested Action

Final Plat and zoning

Application Details					
Applicant	Owner	Subdivision	Legal Description		
Verity	Art Goldammer	Heart Ridge Replat	Lots 9-16, Block 1		
Location		Proposed Land Use	Parcel Size		Number of Lots
14th St. SE west of 8th Ave. SE		Townhomes	.78 acres		14
Existing Land Use	Adjacent Land Uses	Current Zoning	Proposed Zoning	Adjacent Zoning	
vacant	Residential	RM	PUD	R7, RM & LSMHS	
Fees	Date Paid	Adjacent Property Notification Sent	Legal Notices Published		
$600	8/27/2015	9/18/2015	9/11 & 9/18		

Project Description

This is a request to develop a 14 unit townhouse project with two rows of units, six in front and eight in the rear with a common private driveway and garages under the units facing the center of the property and accessed off the common driveway. Four of the units will have two bedrooms and the other ten will have three bedrooms. Total heated space will range from 1215 square feet to 1741 square feet.

Narrow lots will allow units to have fee simple title and be sold via warranty deed so FHA financing is available.

Due to the design of the project, the developer is requesting adjustments to some of the normal requirements in order to allow this design. Creation of a PUD District to document these adjustments is proposed.

There are 2 large twin homes across the street, a mobile home subdivision to the east on the opposite side of the street, 2 four-plex units on the same side of the street to the east and large lot single family units on the same side of the street to the west.

RM allows a density of up to 30 units per acre. The proposed project is less than 18 units per acre.

RM lists a minimum lot width of 40 feet. However, later in the text there are adjustments allowed for attached units with no side yards. The existing four-plex units to the east are on lots that vary in width from 21.5 feet to 31.5 feet. The proposed project will have narrow lots.

RM has a floor area ratio of 120% for multi-story structures. Since garages and other unheated storage areas are not counted, only 2 stories of each unit would be counted. That results in an FAR of approximately 64%, about half the maximum allowable.

RM has a 40% ground coverage requirement. 2 of the proposed lots will be commonly owned with driveways and parking areas, but no structures. While individual lots may exceed the 40% standard, the total structure ground coverage for the project is 32%. Adding the 9 proposed parking spaces as specified in the requirements brings the total ground coverage to 37%.

RM has a 15 foot front yard setback. Due to a jog in the front wall of the units, less than half of the frontage of 4 of the 6 front units will be close to the minimum setback. The remaining 2 front units will have a front

setback of almost 30 feet.

RM has a minimum side yard setback of 4 feet for lots less than 50 feet in width. These lots will be less than 50 feet in width. The project is designed with parking areas along the sides so the front row of units will be set back approximately 50 feet from the adjoining properties. The rear units will have between a 10 foot and 20 foot side yard setback. There is an undevelopable wedge of land on the west side between this project and the neighboring single family lot that effectively increases the setback on the west side for the rear units to more than 50 feet.

RM has a rear yard setback requirement of 10 feet. The proposed rear yard setback is approximately 30 feet. There is undeveloped land behind this project that falls away to a drainage area. There is the potential to develop some of this area with a multi-unit project.

RM allows a height of 6 stories or 60 feet. The proposed units are 3 stories.

RM has a minimum average lot size of 2400 square feet for attached dwellings. Taking the area of the development and dividing by 14 units yields an average lot size of 2442.

The code requires a minimum of 2 parking spaces per dwelling unit. Each unit will have a 2 stall garage. The code adds another condition that requires that half the minimum required spaces be exterior with the assumption that people will fill the garage with stuff. All units have a designated storage area in addition to the 2 stall garage. The proposed site plan shows 9 exterior spaces with the possibility of adding one more. This would be 4 or 5 short of the 14 required. As with many recent projects, the adjoining four-plex units have a driveway apron for most of the frontage so there is no on-street parking in front of those units. This project will have space for up to 7 cars to park along the curb between the two driveway entrances.

A 6" sewer tap is provided. This is adequate to serve 14 units. The water line is located in the boulevard on this side of the street. No street cuts will be needed.

The Land Use and Transportation Plan shows this area as primarily single-family with some multi-family. Much of this area has been recently developed. This is one of the few remaining undeveloped parcels.

There have been previous actions to modify the requirements in RM to reduce density and structure height in this area as well as limiting the location of garages. These actions were taken without the benefit of having a PUD option in the zoning code at that time and could be challenged. This request revisits some of those issues and uses the PUD option as a legal way to modify district requirements.

Agency & Other Department Comments

Engineering & Planning Staff Comments

Engineering & Planning Recommendation

Create a PUD district with the following requirements and adjustments to RM standards:

1. The minimum lot width shall be less than 40 feet.
2. The maximum ground coverage for individual lots may be greater than 40% with the overall project ground coverage limited to 40%.
3. The maximum building height shall be limited to 3 stories.
4. Minimum lot sizes may be less than 2400 square feet with the overall project average lot size being

greater than 2400 square feet.

5. On-street parking in front of the property may be counted when computing the minimum required parking for the project.
6. The private driveways shall meet the requirements of the fire department.
7. The private driveways shall include an unrestricted utility and access easement.
8. The private driveway parcels 1 and 8 shall be owned in undivided interest by parcels 2-7 and 9-16.
9. The drivable area between structures where the garage doors are located shall be a minimum of 30 feet wide.
10. The public sidewalk along the frontage of the lots shall be constructed prior to issuance of the first occupancy permit.

Proposed Motion

Move to recommend creation of a PUD zoning district as outlined and a replat for Lots 9-16 of the replat of Lots 27-29, Block 1, Heart Ridge Addition.

HEART RIDGE COVE ADDITION

BEING A REPLAT OF LOTS 9–16 BLOCK 1
HEART RIDGE ADDITION REPLAT
PART OF THE SE 1/4 OF SECTION 34, T. 139 N., R. 81 W.,
TO THE CITY OF

MANDAN, MORTON COUNTY, NORTH DAKOTA

DESCRIPTION

HEART RIDGE COVE ADDITION, BEING A REPLAT OF LOTS 9–16 BLOCK 1 HEART RIDGE ADDITION REPLAT, PART OF THE SE 1/4 OF SECTION 34, T. 139 N., R. 81 W., TO THE CITY OF MANDAN, MORTON COUNTY, NORTH DAKOTA, DESCRIBED AS FOLLOWS

BEGINNING AT THE NORTHWEST CORNER OF LOT 8 BLOCK 1 HEART RIDGE ADDITION REPLAT; THENCE SOUTH 00 DEGREES 00 MINUTES 43 SECONDS EAST, ALONG THE WEST LINE OF SAID LOT 8, A DISTANCE OF 160.00 FEET TO THE NORTH LINE OF LOT 17 BLOCK 1 HEART RIDGE ADDITION REPLAT; THENCE SOUTH 89 DEGREES 59 MINUTES 17 SECONDS WEST, ALONG THE BOUNDARY OF SAID LOT 17, A DISTANCE OF 210.20 FEET; THENCE NORTH 00 DEGREES 00 MINUTES 43 SECONDS WEST, CONTINUING ALONG SAID BOUNDARY, A DISTANCE OF 146.44 FEET TO EAST LINE OF LOT 26 BLOCK 1 HEART RIDGE ADDITION; THENCE NORTH 15 DEGREES 00 MINUTES 00 SECONDS EAST, ALONG SAID WEST LINE, A DISTANCE OF 29.33 FEET TO THE NORTHEAST CORNER OF SAID LOT 26; THENCE SOUTHEASTERLY AND TO THE LEFT, ON A 433.00 FOOT RADIUS CURVE, THE RADIUS OF WHICH BEARS NORTH 15 DEGREES 00 MINUTES 00 SECONDS EAST, AN ARC LENGTH OF 113.45 FEET; THENCE NORTH 89 DEGREES 59 MINUTES 17 SECONDS EAST, A DISTANCE OF 90.45 FEET TO THE POINT OF BEGINNING.
THE ABOVE DESCRIBED TRACT CONTAINS 34,185 SQUARE FEET, MORE OR LESS.

SURVEYOR'S CERTIFICATE

I, TERRY BALTZER, A PROFESSIONAL LAND SURVEYOR IN THE STATE OF NORTH DAKOTA, HEREBY CERTIFY THAT THE ANNEXED PLAT IS A TRUE COPY OF THE NOTES OF A SURVEY PERFORMED UNDER MY SUPERVISION AND COMPLETED ON _____, THAT ALL INFORMATION SHOWN HEREON IS TRUE AND CORRECT TO THE BEST OF MY KNOWLEDGE AND BELIEF, THAT ALL MONUMENTS SHOWN HEREON ARE CORRECT, THAT ALL REQUIRED MONUMENTS HAVE BEEN SET, AND THAT ALL DIMENSIONAL AND GEODETIC DETAILS ARE CORRECT.

SWENSON, HAGEN & CO. P.C.
909 BASIN AVENUE
BISMARCK, NORTH DAKOTA

_____
TERRY BALTZER
PROFESSIONAL LAND SURVEYOR
N.D. REGISTRATION NO. 3595

STATE OF NORTH DAKOTA)
)SS
COUNTY OF BURLEIGH)

ON THIS _____ DAY OF _____ 2015, BEFORE ME PERSONALLY APPEARED TERRY BALTZER, KNOWN TO ME TO BE THE PERSON DESCRIBED IN AND WHO EXECUTED THE FOREGOING SURVEYOR'S CERTIFICATE AND HE ACKNOWLEDGED TO ME THAT HE EXECUTED THE SAME.

_____
DAVID PATIENCE, NOTARY PUBLIC
BURLEIGH COUNTY, NORTH DAKOTA
MY COMMISSION EXPIRES AUGUST 24, 2016

APPROVAL OF CITY PLANNING COMMISSION

THE SUBDIVISION OF LAND AS SHOWN ON THE ANNEXED PLAT HAS BEEN APPROVED BY THE PLANNING COMMISSION OF THE CITY OF MANDAN, ON THE ____ DAY OF _____, 2015, IN ACCORDANCE WITH LAWS OF THE STATE OF NORTH DAKOTA, ORDINANCES OF THE CITY OF MANDAN AND REGULATIONS ADOPTED BY THE SAID PLANNING COMMISSION. IN WITNESS WHEREOF ARE SET THE HANDS AND SEALS OF THE CHAIRMAN AND SECRETARY OF THE PLANNING COMMISSION OF THE CITY OF MANDAN.

_____ _____
BILL ROBINSON – CHAIRMAN _____– SECRETARY

APPROVAL OF BOARD OF CITY COMMISSIONERS

THE BOARD OF CITY COMMISSIONERS OF THE CITY OF MANDAN, NORTH DAKOTA, HAS APPROVED THE SUBDIVISION OF LAND AS SHOWN ON THE ANNEXED PLAT, HAS ACCEPTED THE DEDICATION OF ALL STREETS SHOWN THEREON, HAS APPROVED THE GROUNDS AS SHOWN ON THE ANNEXED PLAT AS AN AMENDMENT TO THE MASTER PLAN OF THE CITY OF MANDAN, NORTH DAKOTA, AND DOES HEREBY VACATE ANY PREVIOUS PLATTING WITHIN THE BOUNDARY OF THE ANNEXED PLAT.
THE FOREGOING ACTION OF THE BOARD OF CITY COMMISSIONERS OF MANDAN, NORTH DAKOTA, WAS TAKEN BY RESOLUTION APPROVED THE ____ DAY OF _____, 2015.

_____
ARLYN VANBEEK–MAYOR

_____
ATTEST: JIM NEUBAUER
CITY ADMINISTRATOR

APPROVAL OF ENGINEER

I, _____, HEREBY APPROVE "HEART RIDGE COVE ADDITION", MANDAN, NORTH DAKOTA AS SHOWN ON THE ANNEXED PLAT.

_____

OWNER'S CERTIFICATE & DEDICATION

KNOW ALL MEN BY THESE PRESENTS THAT VERITY HOMES OF BISMARCK, LLC, BEING THE OWNER AND PROPRIETOR OF THE PROPERTY SHOWN HEREON HAVE CAUSED THAT PORTION DESCRIBED HEREON TO BE SURVEYED AND PLATTED AS "HEART RIDGE COVE ADDITION", MANDAN, NORTH DAKOTA.
THEY ALSO DEDICATE EASEMENTS TO RUN WITH THE LAND, FOR GAS, ELECTRIC, TELEPHONE OR OTHER PUBLIC UTILITIES OR SERVICES INCLUDING SANITARY SEWER AND WATER MAINS ON OR UNDER THOSE CERTAIN STRIPS OF LAND DESIGNATED HEREON AS UTILITY EASEMENTS.

STATE OF NORTH DAKOTA)
)SS
COUNTY OF BURLEIGH)

_____
ARTHUR GOLDAMMER
VERITY HOMES OF BISMARCK, LLC
3100 N. 14TH ST.
BISMARCK ND 58503

ON THIS ____ DAY OF _____, 2015, BEFORE ME PERSONALLY APPEARED ARTHUR GOLDAMMER KNOWN TO ME TO BE THE PERSONS DESCRIBED IN AND WHO EXECUTED THE FOREGOING CERTIFICATE AND HE ACKNOWLEDGED TO ME THAT HE EXECUTED THE SAME.

_____
DAVID PATIENCE, NOTARY PUBLIC
BURLEIGH COUNTY, NORTH DAKOTA
MY COMMISSION EXPIRES AUGUST 24, 2016

NOTES

BASIS OF BEARING:
NORTH DAKOTA STATE PLANE, SOUTH ZONE

BEARINGS AND DISTANCES MAY VARY FROM PREVIOUS PLATS DUE TO DIFFERENT METHODS OF MEASUREMENTS.

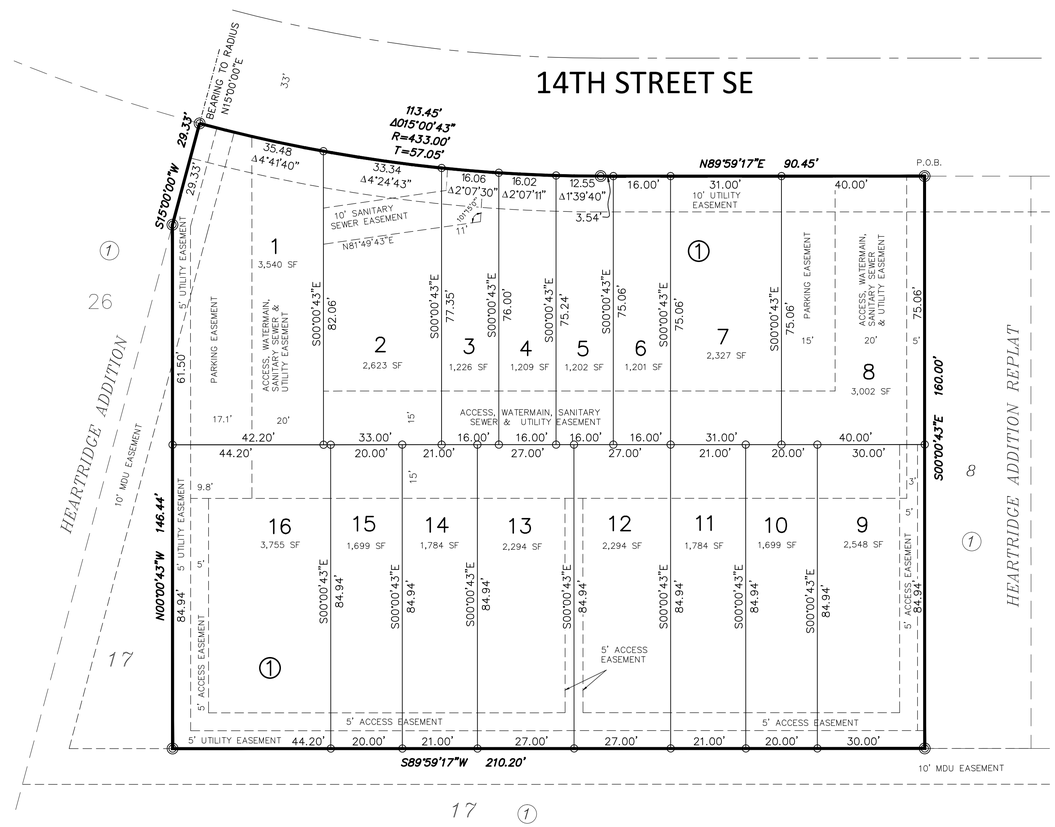

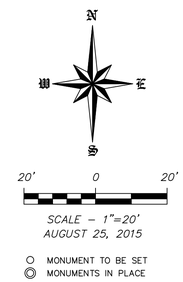

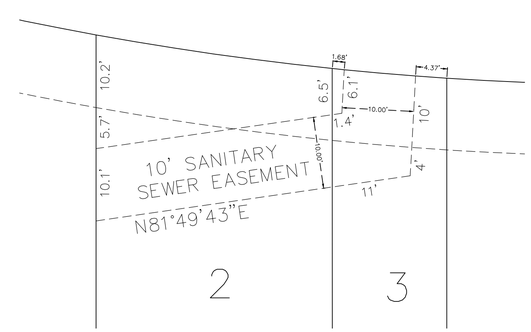

SANITARY SEWER EASEMENT DETAIL (NOT TO SCALE)

SWENSON, HAGEN & COMPANY P.C.
909 Basin Avenue
Bismarck, North Dakota 58504
shengi@swensonhagen.com
Phone (701) 223 - 2600
Fax (701) 223 - 2606
Surveying
Hydrology
Land Planning
Civil Engineering
Landscape & Site Design
Construction Management

Proposed Heart Ridge Cove Multi-family Housing Project

The proposal is to rezone the area from RM (Multi-family Residential) to PUD (Planned Unit Development) to allow development of a 14 unit townhouse project. The configuration will consist of a 6 unit structure in the front with parking along each side and two 4 unit structures in the rear. The units will have 2 or 3 bedrooms. Garages will face the center of the lot and be accessed from a common driveway. This proposed project has been successfully marketed in the area and provides a different housing option than what is currently available in Mandan. The design of the project will allow FHA financing.

The proposed project meets most RM requirements.

- RM allows a density of up to 30 units per acre. The proposed project is less than 18 units per acre.
- The existing four-plex units to the east are on lots that vary in width from 21.5 feet to 31.5 feet. The proposed project will have similar narrow lots between 16 feet and 26 feet in width.
- RM has a floor area ratio for multi-story structures of 120%. The proposed project has an FAR of 64%.
- RM has a 40% ground coverage requirement. 2 of the proposed lots will be commonly owned with driveways and parking areas, but no structures. While individual lots may exceed the 40% standard, the total structure ground coverage for the project is 37%.
- RM has a 15 foot front yard setback. Less than half of the frontage of 4 of the 6 front units will be close to the minimum setback. The remaining 2 front units will have a front setback of almost 30 feet.
- RM has a minimum side yard setback of 4 feet. Because the project is designed with parking areas along the sides, the front row of units will be set back approximately 50 feet from the adjoining properties. The rear units will have between a 10 foot and 20 foot side yard setback. There is an undevelopable wedge of land on the west side between this project and the neighboring single family lot that effectively increases the setback on the west side for the rear units to more than 50 feet.
- RM has a rear yard setback requirement of 10 feet. The proposed project has a rear yard setback of approximately 30 feet.
- RM allows a height of 6 stories or 60 feet. The proposed units are 3 stories.
- RM has a minimum average lot size of 2400 square feet for attached dwellings. Taking the area of the development and dividing by 14 units yields an average lot size of 2442.

The code requires a minimum of 2 parking spaces per dwelling unit. Each unit will have a 2 stall garage. All units have a designated storage area in addition to the 2 stall garage. The code adds another condition that requires that half the minimum required spaces be exterior. The proposed site plan shows 9 exterior spaces and there is room for up to 7 cars to park along the curb between the two driveway entrances.

There have been previous actions to modify the requirements in RM to reduce density and structure height in this area as well as limiting the location of garages. These actions were taken without the benefit of having a PUD option in the zoning code at that time and could be challenged. This request revisits some of those issues and uses the PUD option as a legal way to modify district requirements.

NICOLA'S 1ST
HIT FIRST
AUD LOT B
14TH STREET SE
RIDGE DRIVE SE
PLAT
HEART RIDGE ADDITION
FIELDS COURT SE
18TH ST SE
19TH STREET SW
EMBERL
9TH AVE SE
8TH AVENUE SE
7TH AVENUE SE
16TH
SCHOOL DISTRICT 3RD